SNDWAY

深达威® 手持式双向激光测距仪

Dual Laser Distance Meter

用户手册

User Manual

SW-DR60 SW-DR100

中　　文 ---------- 01~18

English ---------- 19~37

产品执行标准：GB/T 14267-2009

2024L378-44

安全条例

初次使用仪器前，请先仔细阅读安全条款和操作指南

⚠ 在使用仪器之前请仔细阅读本手册中的所有操作指南和安全条例，没有按照本手册所指引的操作方法使用仪器有可能会造成仪器的损害、影响测量精度、对使用者或第三者的人身伤害。

⚠ 不要用任何方式自行打开或修理仪器，严禁非法改装或改变仪器激光发射器的性能。请妥善保管仪器，不要放置在儿童可以接触到的地方，避免无关人员的使用。

⚠ 严禁用仪器激光器照射自已或他人的眼睛及身体其他部位，严禁将激光器照射在高反光的物体表面上。

⚠ 仪器电磁辐射可能对其他设备和装置造成干扰，请不要在飞机或医疗设备附近使用本仪器，不要在易燃、易爆的环境中使用仪器。

⚠ 报废的仪器不可与生活垃圾一同处理，请按国家或者当地的相关法律规定处理报废仪器。

⚠ 仪器出现任何的质量问题，或对使用仪器有任何疑问时请及时联系当地经销商或深达威仪器厂家，我们将第一时间为您解决。

感谢您购买 SNDWAY 深达威®仪器 手持式激光测距仪系列产品！

专业铸造品质　品质成就品牌

显示屏、键盘

● 显示屏

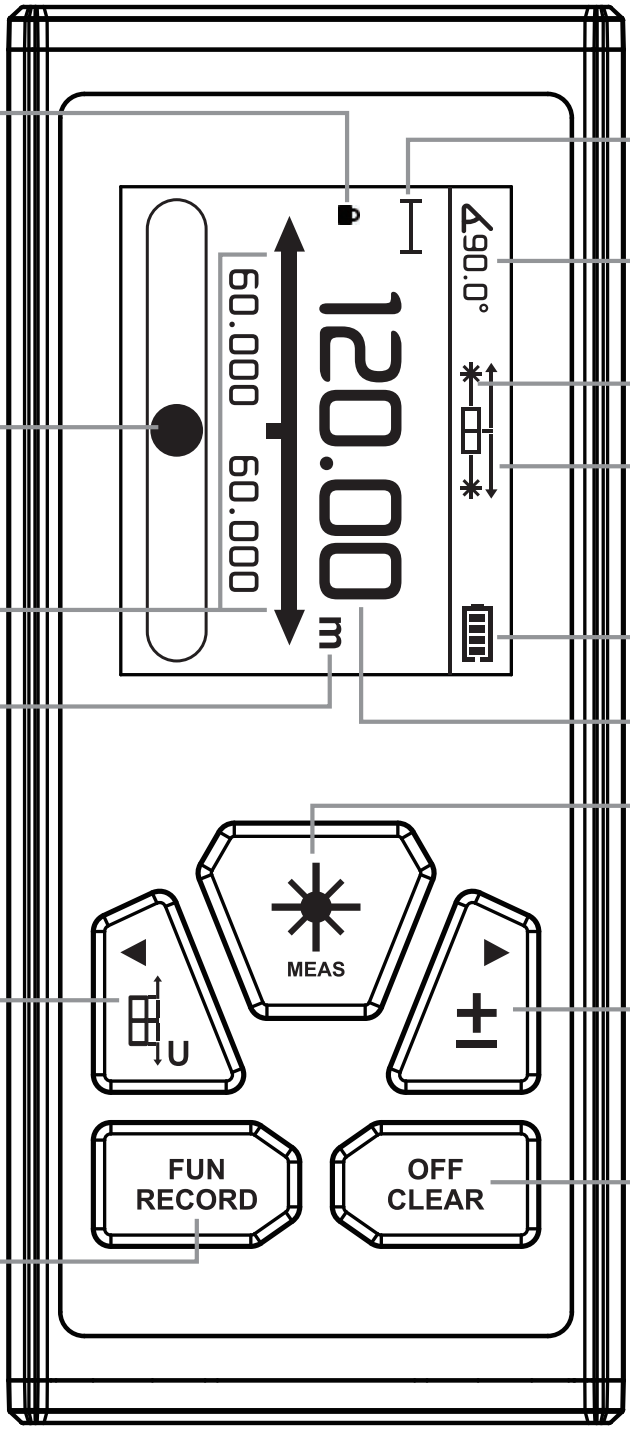

- 屏幕锁定指示
- 测量模式
- 角度指示
- 激光指示
- 水平泡
- 基准指示
- 辅显示区
- 电量指示
- 单位
- 主显示区

● 键盘

- 开机／测量键
- 单位键／测量基准键
- 累加／累减／锁屏键
- 长度／面积／体积／三角测量模式
- 关机／清除键

基本功能

● 启动仪器和关闭仪器

关机状态下，长按 MEAS 键3秒，仪器启动，仪器进入待测模式。

开机状态下，长按 OFF CLEAR 键3秒关闭仪器。180秒内未对仪器进行任何操作，仪器将自动关闭。

● 单位设定

在长度待测模式下，长按 U 键，进入测量单位调整状态，该仪器提供了6种单位可供选择。

测量单位：

	长 度	面积	体积
1	0.000 m	0.000 m^2	0.000 m^3
2	0.00 m	0.00 m^2	0.00 m^3
3	0.0 in	0.00 ft^2	0.00 ft^3
4	0 1/16 in	0.00 ft^2	0.00 ft^3
5	0'00" 1/16	0.00 ft^2	0.00 ft^3
6	0.00 ft	0.00 ft^2	0.00 ft^3

● 测量基准设定

短按 键进行测量基准设置，系统默认基准为双向测量。

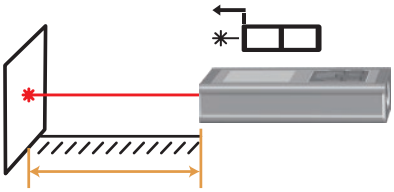

向左前基准

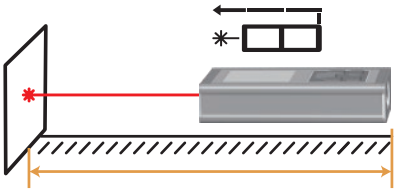

向左后基准

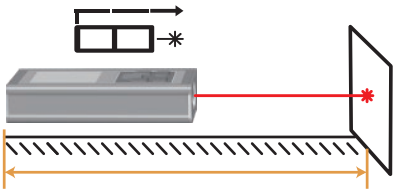

向右后基准

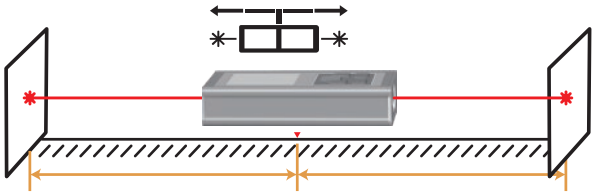

双向测量

● 测量模式选择

短按 FUN RECORD 键，进入模式选择，显示如下：

短按 键，切换模式；

短按 MEAS 键，选择模式；

短按 OFF CLEAR 键，返回；

仪器共有九种模式选择：

	长度模式		测角求高模式
	面积模式		求直角三角形高度
	体积模式		求直角三角形斜边
	墙面面积模式		求三角形底边和
			求直角三角形辅助高

● 转屏与锁定

仪器支持自动转屏，长按 ± 键，锁定屏幕方向，屏幕显示【 🔒 】图标，再长按 ± 键，取消屏幕方向锁定。

● 电子水平泡

仪器附带电子水平泡，可测量平面的水平度。

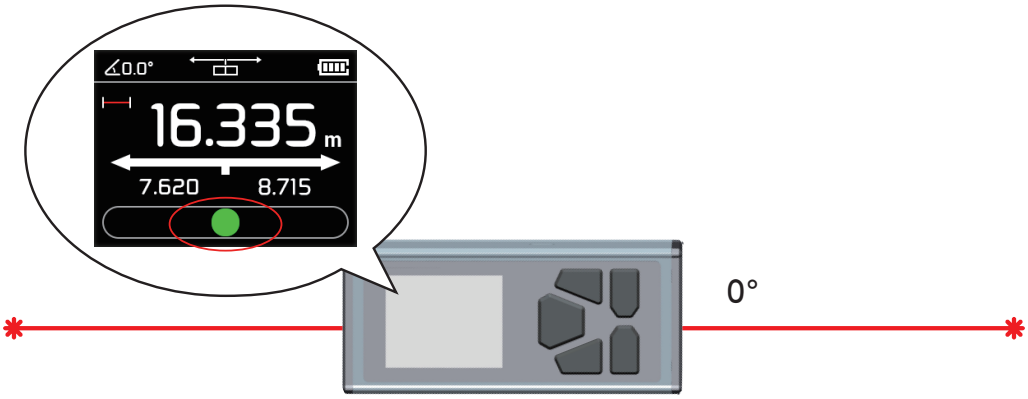

● 强磁吸附

机身背部带磁，可吸附金属表面。

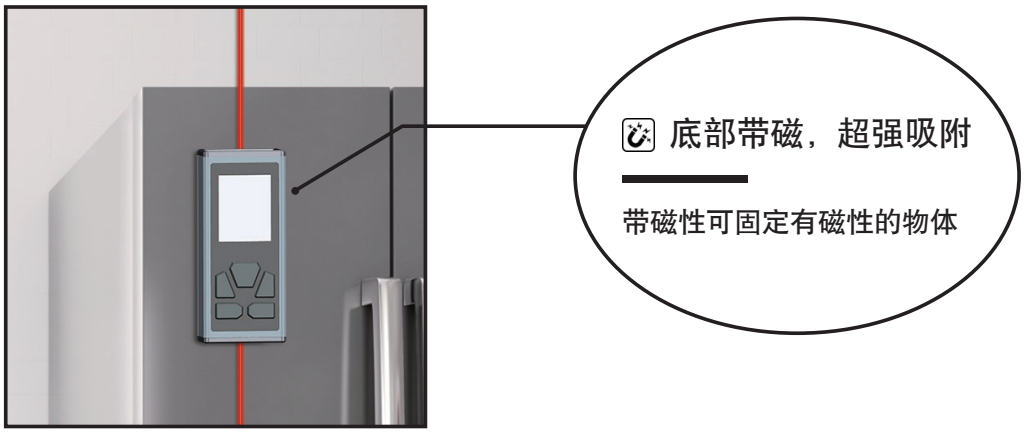

● 角度测量

仪器内置倾角传感器，可以实时测量底边和侧边两面的角度。

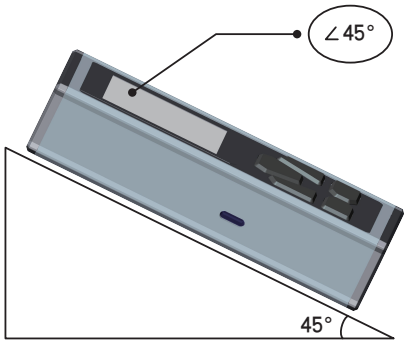

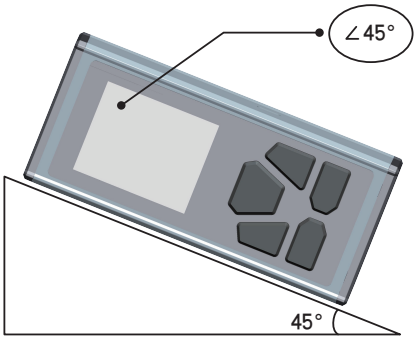

● 声音开关与自助校准

按住 OFF CLEAR 键，再按 MEAS 键开机，屏幕亮起后，立即松开 MEAS 键，等到屏幕显示“Sound”后，松开 OFF CLEAR 键，进入声音设置。

1.声音设置：

通过 ⊞ ± 切换声音开(on)关(off)；短按 MEAS 键保存设置并进入自助校准。

2.自助校准：

自助校准分两步，先调前端数值(仪器顶部靠近显示屏处发射激光)，再调后端数值(仪器底部靠近按键发射激光)，可调整范围：−0.009m至+0.009m，操作方法如下：

- 通过短按 ⊞ ± 键，修改自助校准数值；
- 声音调整结束后，进入前端调整，短按 MEAS 键进入后端调整，后端调整完成，短按 MEAS 进入测量界面。

3.自助校准使用举例：假设实际距离为3.780m

- 将仪器设置为向左后基准，测得3.778m,比实际值小2mm，则将前端数值调整为+0.002m；
  若测得3.783m,比实际值大3mm，则将前端数值调整为–0.003m；
- 将仪器设置为向右后基准，测得3.778m,比实际值小2mm，则将后端数值调整为+0.002m；
  若测得3.783m,比实际值大3mm，则将后端数值调整为–0.003m。

距离测量、面积，体积，勾股间接测量累加，累减测量

● 长度模式–单次测量 ⊢⊣ ：

长度模式下按 MEAS 键，仪器激光发射，锁定测量点。再按 MEAS 键进行单次距离数据的测量，测量结果显在主显示区；双向测量时，辅显示区显示左右两端距离。

● 长度模式–连续测量 ⊢⊣ ：

长度模式下长按 MEAS 键，进入连续测量状态，屏幕显示实时测量数据，最大值，最小值；短按 MEAS 键或 OFF CLEAR 键退出连续测量模式。

中点寻找：将基准调至双向基准，长按 MEAS 键开启连续测量，根据以下提示，寻找中间点。

横屏：

1.屏幕显示【←】，请向左移动

2.屏幕显示【→】，请向右移动

竖屏：

1.屏幕显示【↑】，请向上移动

2.屏幕显示【↓】，请向下移动

屏幕显示 →|← 时，表示当前处于中点位置。

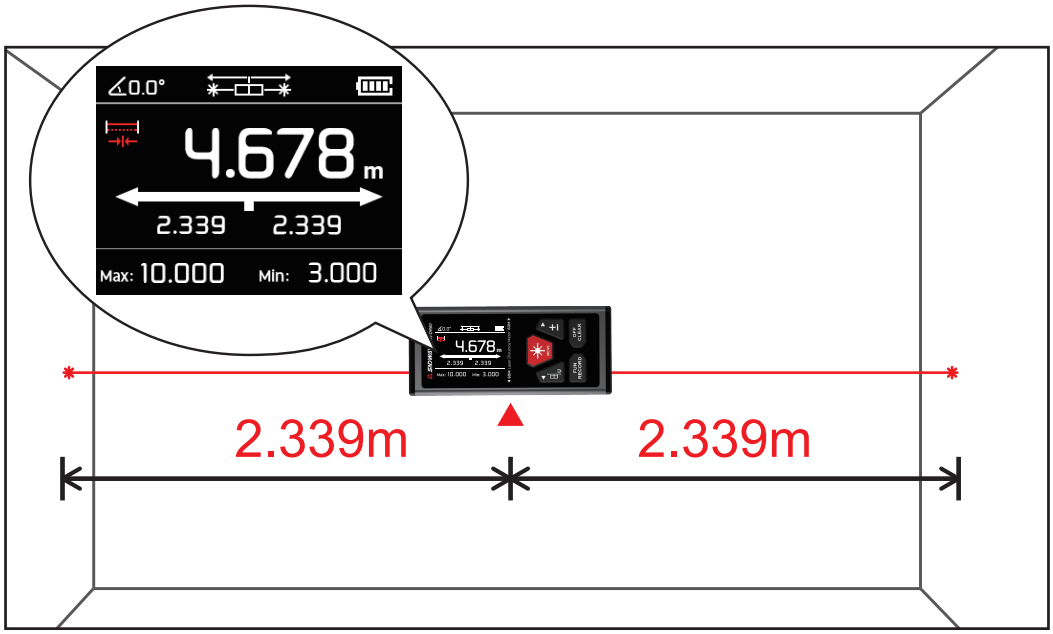

● 面积测量 □ ：

按 MEAS 键进行第一条边的测量(长)

按 MEAS 键进行第二条边的测量(宽)

辅助显示区显示长方形的长和宽的测量值。在测量过程中，还可以键入 OFF CLEAR 清除本次测量结果重新测量。

● 体积测量 ：

按 MEAS 键进行第一条边的测量(长)

按 MEAS 键进行第二条边的测量(宽)

按 MEAS 键进行第三条边的测量(高)

仪器会自动进行体积运算，结果显示在主显示区。辅助显示区显示立方体的长宽高的测量值。

在测量过程中，还可以键入 OFF CLEAR 清除本次测量结果重新测量。

● 墙面面积测量 ：

按 MEAS 键，测得墙面的高度；

按 MEAS 键，测得墙面1的宽度1；

仪器会自动计算墙面的面积=高度x宽度1；

按 MEAS 键，测得墙面2的宽度2；

仪器会自动计算墙面的面积总和

面积总和=高度x(宽度1+宽度2)

依次类推，按 MEAS 键，测得墙面n的宽度n；

面积总和=高度 x（宽度1+宽度2+.....+宽度n）；

在测量过程中，还可以键入 OFF CLEAR 清除本次测量结果重新测量。

● 勾股定理间接测量：

❶ 测角求高 （如图一所示）

按 MEAS 键，依屏幕提示先测出斜边长度(a)

仪器同时测出斜边与底边夹角 θ。

仪器自动计算水平距离 b 与垂直高度 h。

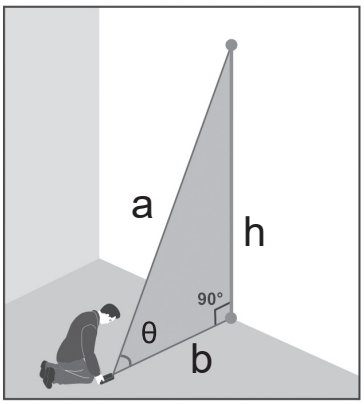

（图一）

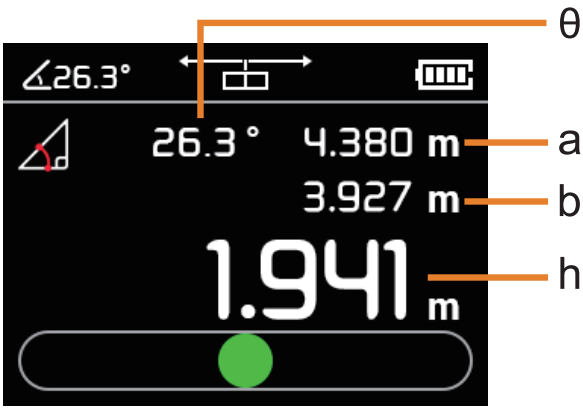

（屏幕示意图）

❷ 测量直角三角形高度 （如图二所示）

按 键，依屏幕提示先测出斜边长度(a)

按 键，再测出直角边长度(b)

仪器会在第二次测量结束后，自动计算三角形的高(h)

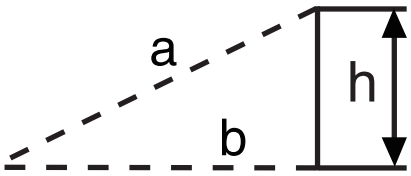

（图二）

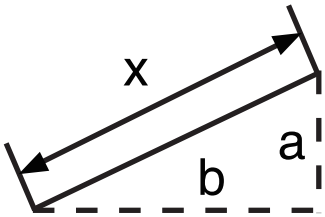

（图三）

❸ 测量直角三角形斜边 （如图三所示）

按 键，依屏幕提示先测出一条边的长度(a)

按 键，再测出一条直角边长度(b)

仪器会在第二次测量结束后，自动计算三角形的斜边(x)

❹ 测量三角形底边和 （如图四所示）

按 键，依屏幕提示先测出一条斜边长度(a)

按 键，再测出直角边长度(b)

按 键，最后测出另外一条斜边长度(c)

仪器在测量结束后，自动计算三角形的高(x)

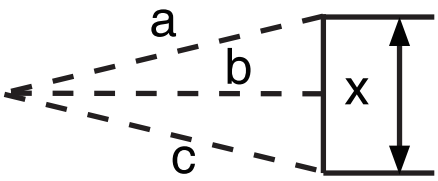

（图四）

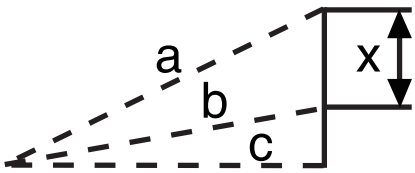

（图五）

❺ 测量三角形辅助高 （如图五所示）

按 键，依屏幕提示先测出一条斜边长度(a)

按 键，再测出另外一条斜边长度(b)

按 键，最后测出直角边长度(c)

仪器在测量结束后，自动计算三角形的辅助线的高度(x)

勾股测量模式，直角边必须小于斜边长度仪器才能计算，否则仪器会显示错误信号提示。在勾股测量模式下，为保证测量的精度，须确保从同一个起始点测量，并按斜边、直角边测量顺序测量。

● 加减测量功能：

1.长度累加减

长度模式下，测量一组数据

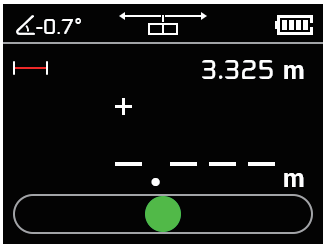

短按 键，进入累加模式

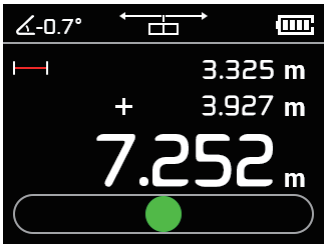

再测量数据，仪器会自动累加求和

短按 键，屏幕测量主显示区出现“+”，进入累加测量模式，继续测量，仪器会自动累加。

在累加模式下，再短按 键，屏幕测量主显示区出现“–”，进入累减测量模式，继续测量，仪器会自动累减。

2.面积、体积累加减

体积累加减和面积累加减操作相同，此处以面积累加为例：

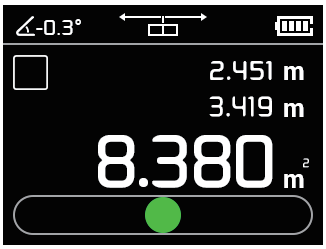

图①

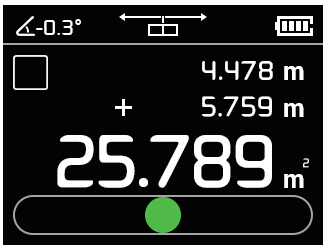

图②

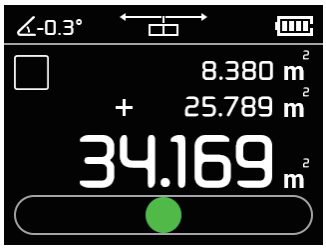

图③

第一步，测量一次面积(如图①)；

第二步，短按 ± 键，屏幕测量主显示区出现“+”，进入累加测量模式，然后测量第二次面积(如图②)；

第三步，短按 MEAS 键，仪器自动求出两次面积的和(如图③)。

面积累减：在第一步，短按 ± 键先进入累加，再短按 ± 切换至累减模式，之后的操作和累加类似，不再复述。

多次累加/减运算：

在第二步，求得第二次面积之后，再次短按 ± 键，可以继续累加/减下一个面积，最后按照第三步，求得结果。

记录

- 仪器测量完成，自动存储结果；
- 长按 FUN RECORD 键查看记录；短按 ± 键前后翻看记录；长按 OFF CLEAR 键，清除所有记录。

充电

- 仪器显示 ，表示电量不足，建议用户立即充电，以免影响测量精度。
- 充电请使用DC5V ⩾1A输出的合规充电器，建议使用手机充电器。
- 充电指示：仪器滚动显示 ，表示未充满。显示 ，且不再滚动，则表示充满。
- 电池保养：长时间不使用，建议先把仪器充满电，并每半年再充电一次，以免电池放电损坏。

提示信息

使用过程中，主显示区可能会出现如下提示信息：

信息	原因	解决方法
Err	超出距离测量范围	让仪器在量程范围内使用
Err1	信号过弱	测量反射能力强的目标点
Err2	信号过强	测量反射能力弱的目标点
Err3	电池电压过低	对电池进行充电
Err4	超出工作温度范围	让仪器在指定环境中使用
Err5	勾股测量违规	重新测量，确保斜边大于直角边
Err6	角度传感器错误	返厂进行维修

技术参数

项目	SW-DR60	SW-DR100
最大测量距离	60m(单向)120m(双向)	100m(单向)200m(双向)
距离测量精度	±(2mm+d*万分之一)*（单向）	
倾角测量范围	±90˚	
连续测量功能	✓	
面积体积测量	✓	
墙面面积测量	✓	
勾股测量功能	✓	
测角测高功能	✓	
长度加减测量	✓	
最大／最小值	✓	
电子水平泡	✓	
自动转屏	✓	
磁吸	✓	
激光等级	II	
激光类型	630-670nm，<1mW	
存储记录笔数	100笔	
自动切断激光	20秒	
自动关机	180秒	
背光时间	60秒	
电池规格	3.7V 850mAh锂电池	
充电时长	约1.5小时	
充电规格	DC5V 0.75A Type-C	
满电工作时间	单向8000次；双向5000次	
存储温度范围	-20˚C~60˚C	
工作温度范围	0˚C~40˚C	
存储湿度	20%~80%RH	
外形尺寸	115x50x24.5mm	

*“d”表示实际距离

** 在恶劣环境下，比如阳光过于强烈、环境温度波动过大、反射面反射效果较弱、电池电量不足等情况下，测量结果会有较大的误差，此种情况配合目标反射板使用效果更佳。

仪器日常保养

- 禁止将仪器长期放置在高温高湿的环境中储存，长期不使用仪器时，请把仪器放置在随机的仪器套内放在阴凉干爽处存放。
- 请保持仪器表面清洁，可用湿的软布擦拭表面灰尘，不可用带有腐蚀性洗液清洁仪器。可按照擦拭光学器件表的方法擦拭激光器窗口和聚焦镜。

装箱清单

购买仪器时请按下列清单认真检查仪器所有附件是否完整。

项目	名称	单位	数量	备注
1	主机	台	1	
2	布包盒	个	1	
3	挂绳	条	1	
4	说明书	本	1	
5	保修合格证	张	1	
6	彩盒	个	1	
7	USB Type-C线	条	1	
8	反光板	个	1	仅100米以上有

检验员：　　日期：

Safety Regulations

Please read the safety regulations and operation guide carefully before operating.

⚠ Please read all of the operational guide and safety regulations in this manual before operation. Improper operations without complying with this manual may cause damage to the device, influence on measurement result or personal injury to the user or a third party.

⚠ The instrument is not allowed to disassemble or repair in any ways. It is forbidden to do any illegal modification or performance change for laser emitter. Please keep it out of reach of children and avoid being used by any irrelevant person.

⚠ It is strictly prohibited to shoot eyes or other parts of body with the laser. It is not allowed to take the laser to shoot the surface of any highly reflective objects.

⚠ Due to electromagnetic radiation interference to other equipment and devices, please don't use the meter in the plane or around medical equipment, don’t use it in inflammable, explosive environment.

⚠ Discarded meter device should not be processed just like household garbage, please handle it in line with related law and regulations.

⚠ Any quality issues or any questions on the meter, please contact local distributors or manufacturer in time, we are ready to offer solutions for you.

Screen/Keys

● Screen

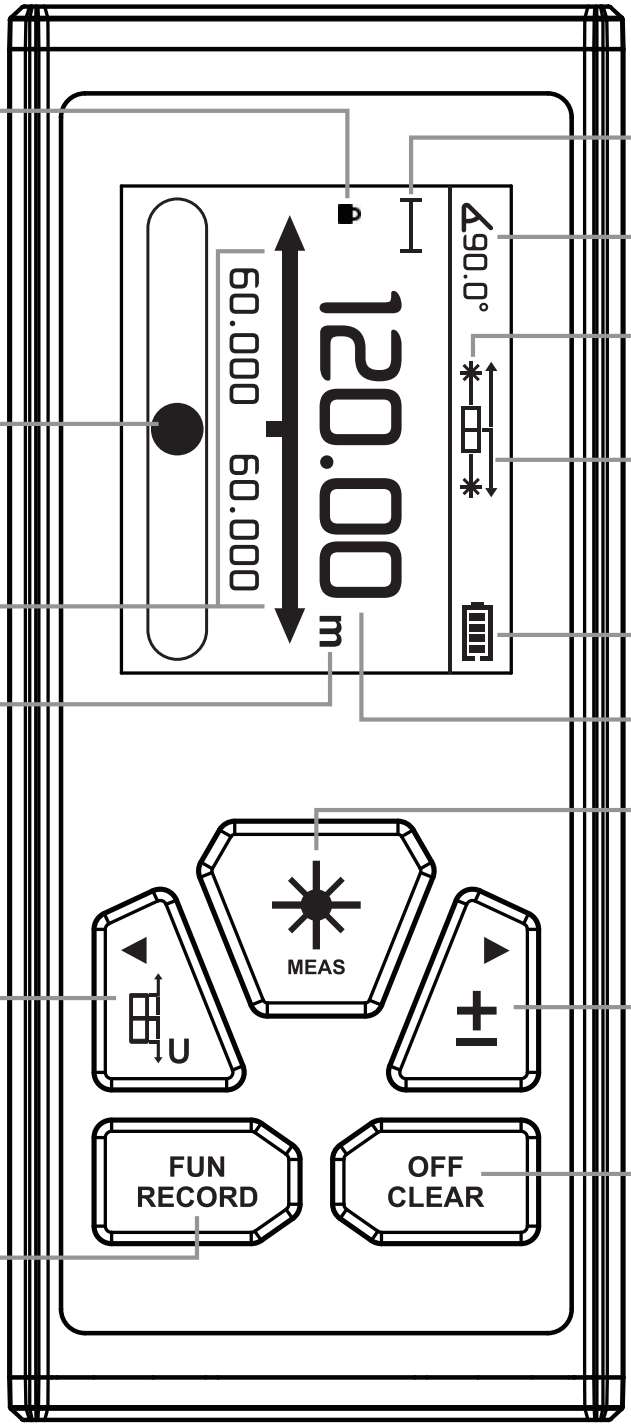

- Screen lock indication
- Level bubble
- Auxiliary display area
- Unit
- Measuring mode
- Angle indication
- Laser indication
- Measuring reference indication
- Battery level indication
- Main display area

● Keys

- Power-on
- Unit/ Measuring reference
- Add/Subtract /Lock screen
- Power-off/ Clear
- Length/Area/ Volume/ Triangulation measuring mode

Main Functions

● Turn on/off the Instrument

In the off state, long press MEAS for 3 seconds to start the instrument, and the instrument enters the test mode.

In the on state, long press OFF CLEAR for 3 seconds to turn off the instrument. If no operation is performed within 180 seconds, the instrument will shut down automatically.

● Unit Setting

In the mode of length measuring, long press to enter the page of units measurement. The instrument provides 6 optional units.

Measurement units:

	Length	Area	Volume
1	0.000 m	0.000 m^2	0.000 m^3
2	0.00 m	0.00 m^2	0.00 m^3
3	0.0 in	0.00 ft^2	0.00 ft^3
4	01/16 in	0.00 ft^2	0.00 ft^3
5	0'00" 1/16	0.00 ft^2	0.00 ft^3
6	0.00 ft	0.00 ft^2	0.00 ft^3

● Setting of Measurement Reference

Press to set the measurement reference.

The default benchmark is bidirectional measurement.

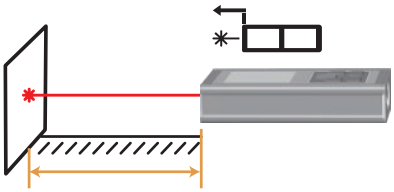

Left-forward datum

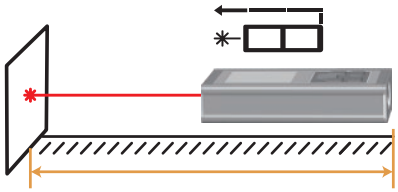

Left-back datum

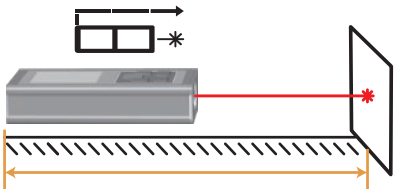

Right-back datum

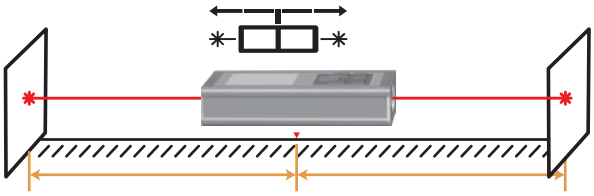

Bidirectional measurement

● Selection of Measuring Mode

Press FUN RECORD to enter mode selection, and the screen will display as follows:

Press to switch mode;

Press MEAS to select mode;

Press OFF CLEAR to return.

The instrument provides 9 optional modes:

	Length mode		Height calculation by measuring angle
	Area mode		Height calculation of right triangle
	Volume mode		Hypotenuse calculation of right triangle
	Wall area mode		Sum calculation of the triangle base sides
			Auxiliary height calculation of right triangle

● Screen Rotation and Lock

The instrument supports automatic screen rotation. Long press ± to lock the screen direction, and the screen displays【🔒】. Long press ± again to cancel the screen orientation lock.

● Electronic Level Bubble

The instrument is equipped with an electronic level bubble to measure the levelness of the plane.

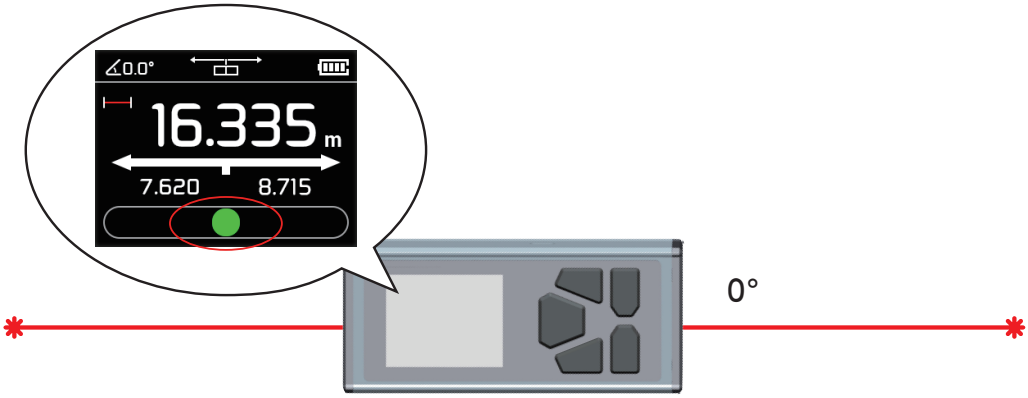

● Strong Magnetic Adsorption

The back of the instrument is magnetic, so that the instrument can be adsorbed on the metal surface.

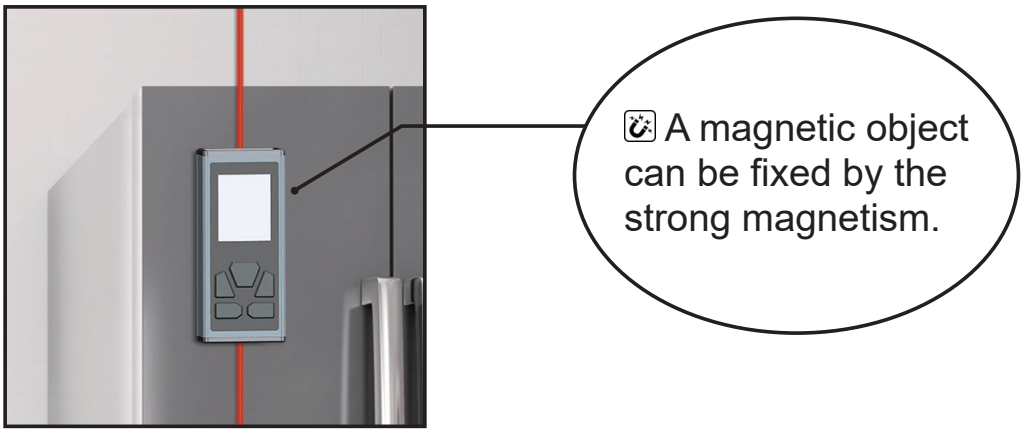

● Angle Measurement

The instrument has built-in tilt sensor, which can measure the angle between the base and the two planes of the instrument in real time.

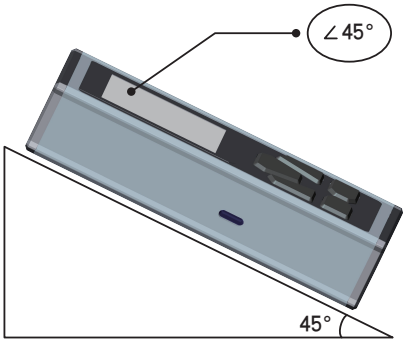

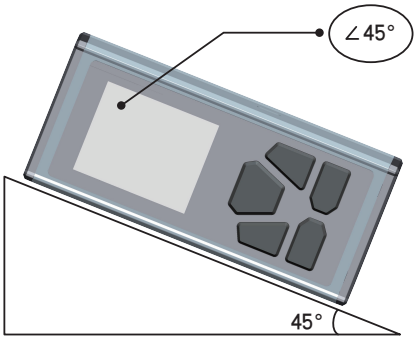

● Sound &Self-calibration

Press and hold OFF CLEAR key and press MEAS key to start. When the screen lights up, release MEAS key immediately. When "Sound" appears on the screen, release OFF CLEAR key, to enter the sound setting.

1. Sound Setting

Switch the sound on/off by pressing U or ±; Press MEAS key to save the settings and enter the self-calibration.

2. Self-calibration

The self-calibration is divided into two steps: firstly adjust the front-end value (laser emission at the top of the instrument near the display), and then adjust the back-end value (laser emission at the bottom of the instrument near the button). The adjustable range is: -0.009m to +0.009m. Operation is as follows:

- Short press U or ± key to modify the self-calibration value.

- After the sound setting, enter the front-end adjustment; Short press MEAS key to enter the back-end adjustment. After the back-end adjustment is complete, press MEAS key to enter the measurement interface.

3. Example of Self-calibration:

   Suppose the actual distance is 3.780m.

- Set the instrument to the left-back reference, if the measured value is 3.778m, 2mm less than the actual value, then adjust the front-end value to +0.002m. If the measured value is 3.783m, 3mm larger than the actual value, then adjust the front-end value to -0.003m;
- Set the instrument to the right-back reference, if the measured value is 3.778m, 2mm less than the actual value, then adjust the back-end value to +0.002m, If the measured value is 3.783m, 3mm larger than the actual value, then adjust the back-end value to -0.003m.

Distance/Area/Volume/Pythagorean /Add/Subtract Measurement

● Length Mode-Single Measurement:

Press MEAS in length mode, and the instrument emits laser to lock the measuring point. Then press MEAS for a single distance measurement, and the measurement results will be displayed in the main display area. In bidirectional measurement, the auxiliary display area displays the distance between the left and right ends.

● Length Mode-Continuous Measurement:

Long press MEAS in length mode to enter continuous measurement mode. The screen displays the real-time measurement data, including maximum value, and

minimum value. Press MEAS or OFF CLEAR to exit the continuous measurement mode.

Midpoint searching: set the reference to bidirectional reference, long press MEAS to start continuous measurement. Follow these tips to look for the middle point.

Landscape screen:

1. If 【←】 is displayed on the screen, please move to the left
2. If 【→】 is displayed on the screen, please move to the right

Portrait screen:

1. If 【↑】 is displayed on the screen, please move up
2. If 【↓】 is displayed on the screen, please move down

If →I← is displayed on the screen, the current position is the midpoint.

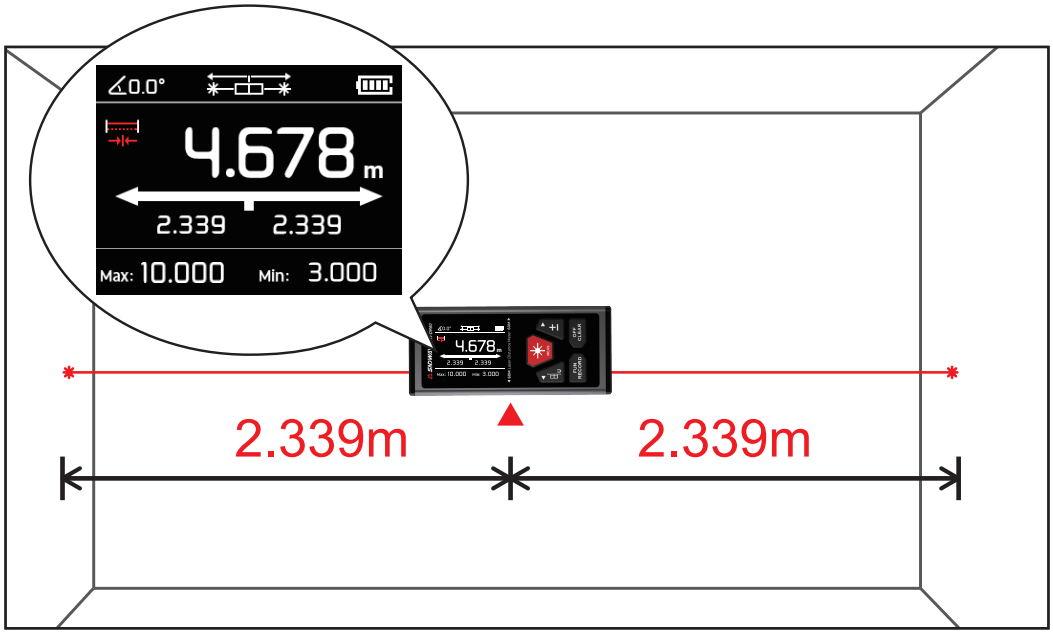

• Area Measurement :

Press MEAS to measure the first side (length)

Press MEAS to measure the second side (width)

The auxiliary display area displays measured values of the length and width of the rectangle. In the measurement process, user can press OFF CLEAR to clear the measurement results and measure again.

• Volume Measurement :

Press MEAS to measure the first side (length)

Press MEAS to measure the second side (width)

Press MEAS to measure the third side (height)

The instrument can calculate volume automatically and display the results in the main display area. The auxiliary display area displays measured value of the length, width and height of the cube.

In the measurement process, user can press OFF CLEAR to clear the measurement results and measure again.

• Wall area measurement :

Press the MEAS to measure the height of the wall;

Press MEAS to measure the width 1 of wall 1;

The instrument will automatically calculate the wall area = height x width 1;

Press MEAS to measure the width 2 of wall 2;

The instrument will calculate the total area of the wall automatically.

Total Area = Height x (Width 1+ Width 2)

By analogy, press MEAS to measure the width of the wall n;

Total Area = Height x (Width 1+ Width 2+..... + Width n);

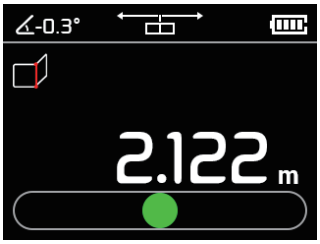

In the measurement process, user can press OFF CLEAR to clear the measurement results and measure again.

- **Indirect Pythagorean Measurement** :

❶ Calculate height by measuring angle (as shown in Figure 1)

Press MEAS to measure the length of the hypotenuse (a) according to the screen prompt.

The instrument will simultaneously measure the angle θ between the hypotenuse and the base.

The instrument automatically calculates the horizontal distance b and the vertical height h.

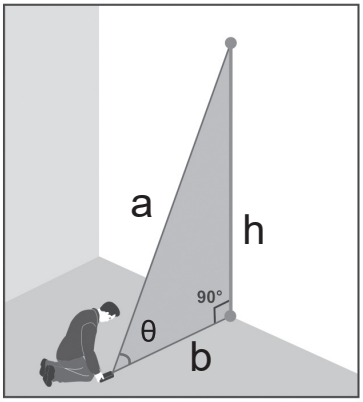

Figure 1

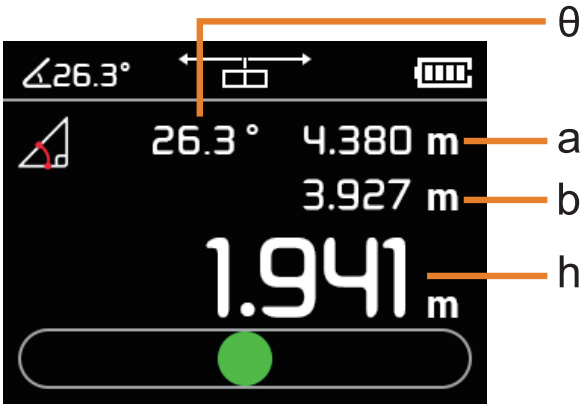

Screen

❷ Measure the height of right triangle (as shown in Figure 2)

Press to measure the length of the hypotenuse (a) according to the screen prompt.

Press to measure the length of the right angle (b).

The instrument will automatically calculate the height (h) of the triangle after the second measurement.

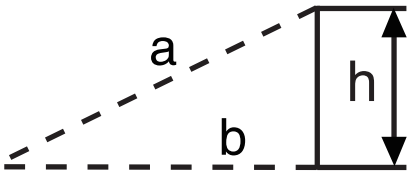

(Figure 2)

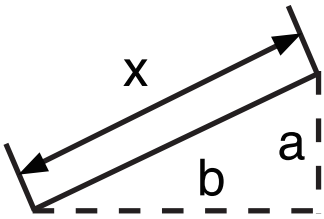

(Figure 3)

❸ Measure the hypotenuse of right triangle (as shown in Figure 3)

Press to measure the length of the side (a) according to the screen prompt.

Press to measure the length of the side (b).

The instrument will automatically calculate the hypotenuse (×) of the triangle after the second measurement.

❹ Measure the sum of triangle base (as shown in Figure 4)

Press to measure the length of the hypotenuse (a) according to the screen prompt.

Press to measure the length of the side (b).

Press to measure the length of the other hypotenuse (c).

The instrument will automatically calculates the height (x) of the triangle after the measurement.

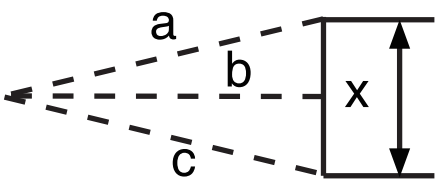

(Figure 4)

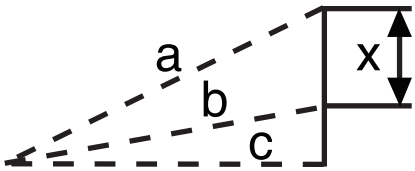

(Figure 5)

❺ Measuring triangle auxiliary height (as shown in Figure 5)

Press to measure the length of the hypotenuse (a) according to the screen prompt.

Press to measure the length of the other hypotenuse (b).

Press to measure the length of the side (c).

After measurement, the instrument will automatically calculate the height (×) of the auxiliary line of the triangle.

In the Pythagorean measurement mode, the length of the right-angle side must be less than the hypotenuse, otherwise the instrument will give an error prompt. To ensure the accuracy of measurement, make sure to measure from the same starting point, and in the order of hypotenuse and right-angle side.

● Addition and Subtraction Measurement

1、Length Addition and Subtraction

Measure a set of data in length mode

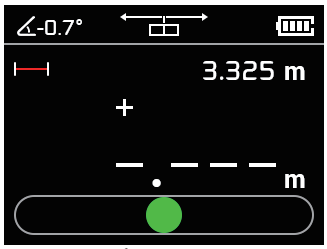

Press ± to enter the addition mode

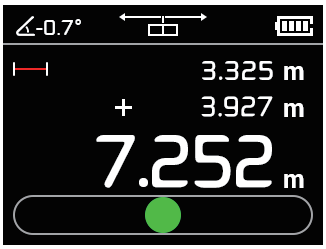

When measuring again, the instrument will automatically add up the data and sum it up

Short press ±, "+" appears in the main display area of the screen, and the instrument enters the addition measurement mode. If the instrument continues to measure, it will automatically add up the measured value.

In the addition mode, press ± again, "-" appears in the main display area of the screen, and the instrument enters the subtraction measurement mode. If the instrument continues to measure, the instrument will automatically subtract the measured value.

2、Area/Volume Addition and Subtraction

The operation of adding and subtracting volume is the same as that of area. Here, take area addition and subtraction as an example:

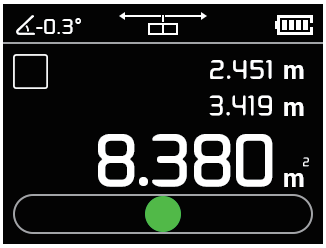

(Figure 1)

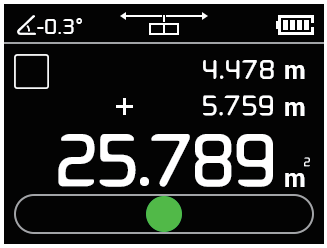

(Figure 2)

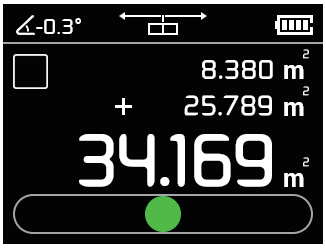

(Figure 3)

Step 1: Measure the area once (Figure 1);

Step 2: Press , "+" appears in the main display area of the screen, and the instrument enters the addition measurement mode. Then measure the area for the second time (Figure 2);

Step 3: Press and the instrument will automatically calculate the sum of two areas (Figure 3).

Area subtraction: In the first step, press to enter the addition mode first. Then press to switch to the subtraction mode. The subsequent operation is similar to the addition mode.

Multiple add/subtract operations:

In the step 2, after the second area is obtained, short press again to continue adding/subtracting the next area. Finally, according to the step 3, the result is obtained.

Records

- After the measurement is completed, the instrument automatically stores the results.
- Long press FUN RECORD to view records; Short press to view the record forward or backward.
  Long press OFF CLEAR to clear all records.

Charging

- If the instrument shows , it means the battery is low. It is recommended that users charge it immediately to avoid affecting the measurement accuracy.
- Use a compliant charger with DC5V ≥1A output for charging. Phone chargers are recommended.
- Charging indication: If scrolls, it means that the battery is not fully charged. If is displayed and is no longer rolling, the battery is fully charged.
- Battery maintenance: If not used for a long time, it is recommended to fully charge the instrument and charge it once every six months to avoid battery discharge damage.

Prompt Information

During usage, the following prompt information may be displayed in the main display area:

Info	Cause	Solution
Err	Out of measuring range	Use the instrument within the measurement range
Err1	Weak signal	Measure the target point with stronger reflectivity
Err2	Strong signal	Measure the target point with weaker reflectivity
Err3	Low battery voltage	Charge the battery
Err4	Out of operating temperature range	Use the instrument in the specified environment
Err5	Wrong Pythagorean measurement	Remeasure, ensure the hypotenuse is longer than the right-angle side
Err6	Angle sensor failure	Return to factory for repair

Specifications

Item	SW-DR60	SW-DR100
Maximum measuring distance	60m(Unidirectional) 120m(Bidirectional)	100m(Unidirectional) 200m(Bidirectional)
Accuracy	±(2mm+D*1/10000)*(Unidirectional)	
Angle measuring range	±90˚	
Continuous measurement	√	
Area/Volume measurement	√	
Wall area measurement	√	
Pythagorean measurement	√	
Angle and height measurement	√	
Length addition/subtraction measurement	√	
Max/Min value	√	
Electronic level bubble	√	
Automatic screen rotation	√	
Magnetism	√	
Laser level	II	
Laser type	630-670nm，<1mW	
Max storage	100 units	
Auto laser-off	20s	
Auto power-off	180s	
Backlight time	60s	
Battery	3.7V 850mAh Li-ion	
Charge time	About 1.5 hours	
Charging specification	DC5V 0.75A Type-C	
Operation times at full charge	8000 times (Unidirectional); 5000 times (Bidirectional)	
Storage temperature	-20˚C~60˚C	
Working temperature	0˚C~40˚C	
Storage humidity	20%~80% RH	
Dimension	115x50x24.5mm	

* "D" indicates the actual distance.

** In harsh environment, such as: strong sunlight, excessively fluctuated ambient temperature, weak reflection effect of the object's surface and the low battery, a large error will occur in measurement results, so a reflecting plate is needed.

Maintenance

- It is forbidden to store the instrument in a high temperature and humid environment for a long time. When the instrument is not used for a long time, please put the instrument in a cloth box and store it in a dry and cool place.
- Please keep the surface of the instrument clean. User can wipe the dust with a damp soft cloth. Do not clean the instrument with corrosive liquid. The laser window and focusing mirror can be wiped in the same way as the optical device.

Packing List

When purchasing the instrument, please check carefully whether all accessories are complete according to the following list.

Item	Name	Unit	QTY	Note
1	Meter	PC	1	
2	Pouch	PC	1	
3	Strap	PC	1	
4	User manual	PC	1	
5	Color box	PC	1	
6	Type-C cable	PC	1	
7	Reflector	PC	1	Available for 100m only

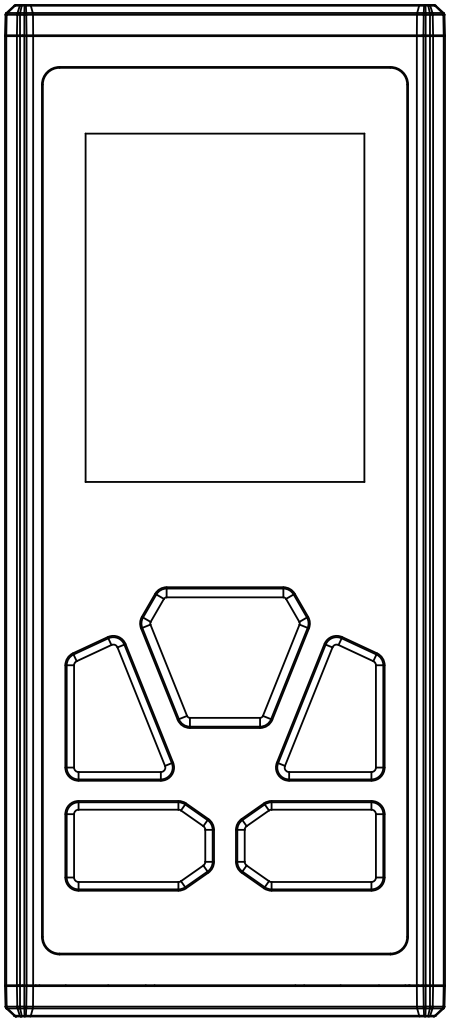

深达威科技(广东)股份有限公司

Sndway Technology (Guangdong) Co., LTD.

地 址：东莞市虎门镇虎门团结路58号深达威科技园

Add: Sndway Science & Technology Industrial Park, 58 Tuanjie Road, Humen 523930, Dongguan, China

全国咨询服务热线/Service Hotline：400-125-6969

电 话/Tel：0769-85265688

网 址/Web：www.sndway.com

邮 箱/E-mail：market@sndway.com